CS 410/510 - Software Engineering

System Modeling

Reference: Sommerville, Software Engineering, 10 ed., Chapter 5

The big picture

System modeling is the process of developing abstract models of a system, with each model presenting a different view or perspective of that system. It is about representing a system using some kind of graphical notation, which is now almost always based on notations in the **Unified Modeling Language** (**UML**). Models help the analyst to understand the functionality of the system; they are used to communicate with customers.

Models can explain the system from **different perspectives**:

- An **external** perspective, where you model the context or environment of the system.
- An **interaction** perspective, where you model the interactions between a system and its environment, or between the components of a system.
- A **structural** perspective, where you model the organization of a system or the structure of the data that is processed by the system.
- A **behavioral** perspective, where you model the dynamic behavior of the system and how it responds to events.

Five types of UML diagrams that are the most useful for system modeling:

- **Activity** diagrams, which show the activities involved in a process or in data processing.
- **Use case** diagrams, which show the interactions between a system and its environment.
- **Sequence** diagrams, which show interactions between actors and the system and between system components.
- **Class** diagrams, which show the object classes in the system and the associations between these classes.
- **State** diagrams, which show how the system reacts to internal and external events.

Models of both new and existing system are used during **requirements engineering**. Models of the **existing systems** help clarify what the existing system does and can be used as a basis for discussing its strengths and weaknesses. These then lead to requirements for the new system. Models of the **new system** are used during requirements engineering to help explain the proposed requirements to other system stakeholders. Engineers use these models to discuss design proposals and to document the system for implementation.

Context and process models

Context models are used to illustrate the operational context of a system - they show what lies outside the system boundaries. Social and organizational concerns may affect the decision on where to position system boundaries. Architectural models show the system and its relationship with other systems.

System boundaries are established to define what is inside and what is outside the system. They show other systems that are used or depend on the system being developed. The position of the system boundary has a profound effect on the system requirements. Defining a system boundary is a political judgment since

there may be pressures to develop system boundaries that increase/decrease the influence or workload of different parts of an organization.

Context models simply show the other systems in the environment, not how the system being developed is used in that environment. **Process models** reveal how the system being developed is used in broader business processes. UML activity diagrams may be used to define business process models.

The example below shows a UML **activity diagram** describing the process of involuntary detention and the role of MHC-PMS (mental healthcare patient management system) in it.

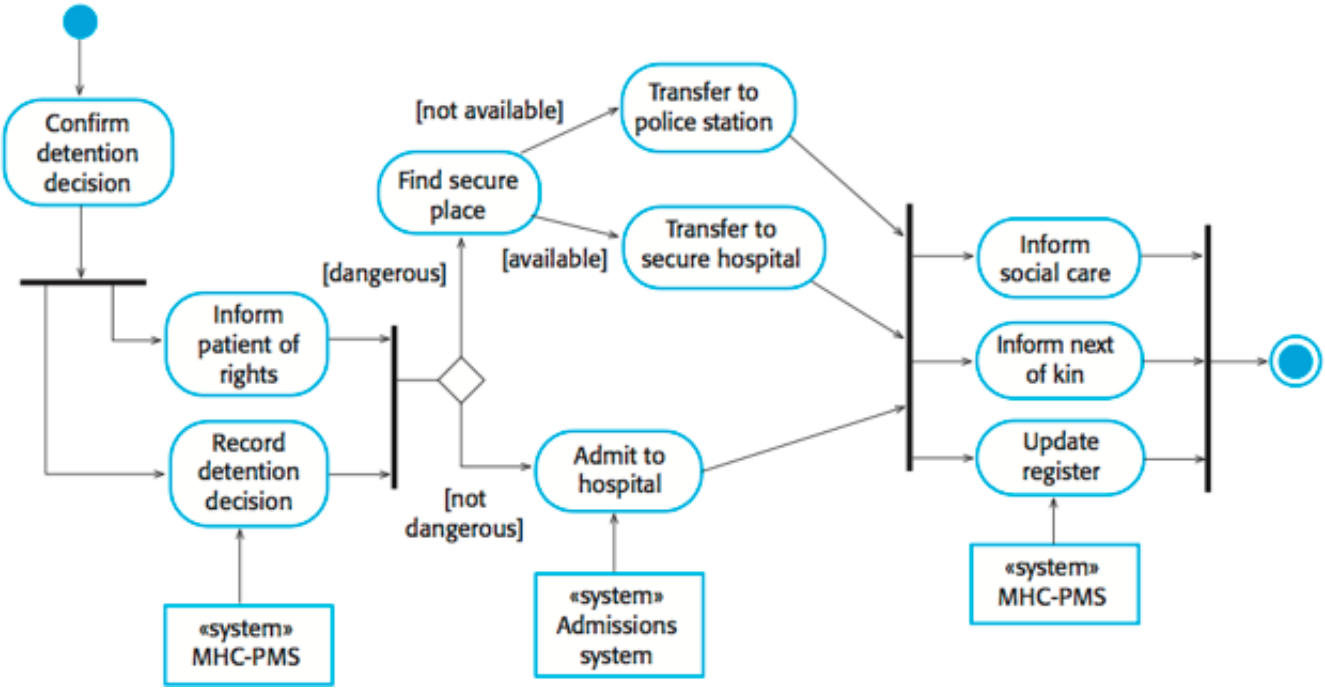

Interaction models

Types of interactions that can be represented in a model:

- Modeling **user interaction** is important as it helps to identify user requirements.
- Modeling **system-to-system interaction** highlights the communication problems that may arise.
- Modeling **component interaction** helps us understand if a proposed system structure is likely to deliver the required system performance and dependability.

Use cases were developed originally to support requirements elicitation and now incorporated into the UML. Each use case represents a discrete task that involves external interaction with a system. Actors in a use case may be people or other systems. Use cases can be represented using a UML use case diagram and in a more detailed textual/tabular format.

Simple use case diagram:

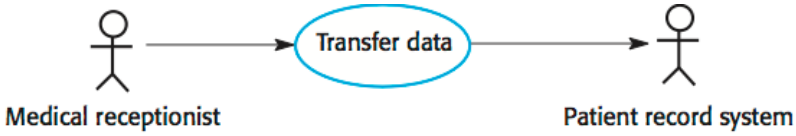

Use case description in a tabular format:

Use case title	Transfer data
Description	A receptionist may transfer data from the MHC-PMS to a general patient record database that is maintained by a health authority. The information transferred may either be updated personal information (address, phone number, etc.) or a summary of the patient's diagnosis

	and treatment.
Actor(s)	Medical receptionist, patient records system (PRS)
Preconditions	Patient data has been collected (personal information, treatment summary); The receptionist must have appropriate security permissions to access the patient information and the PRS.
Postconditions	PRS has been updated
Main success scenario	1. Receptionist selects the "Transfer data" option from the menu. 2. PRS verifies the security credentials of the receptionist. 3. Data is transferred. 4. PRS has been updated.
Extensions	2a. The receptionist does not have the necessary security credentials. 2a.1. An error message is displayed. 2a.2. The receptionist backs out of the use case.

UML **sequence diagrams** are used to model the interactions between the actors and the objects within a system. A sequence diagram shows the sequence of interactions that take place during a particular use case or use case instance. The objects and actors involved are listed along the top of the diagram, with a dotted line drawn vertically from these. Interactions between objects are indicated by annotated arrows.

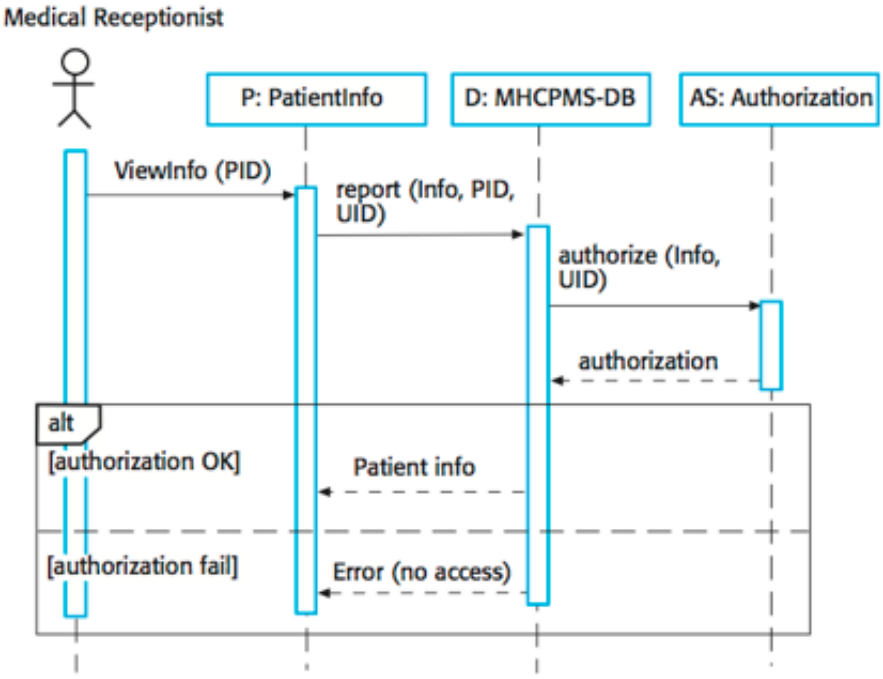

Structural models

Structural models of software display the organization of a system in terms of the components that make up that system and their relationships. Structural models may be **static** models, which show the structure of the system design, or **dynamic** models, which show the organization of the system when it is executing. You create structural models of a system when you are discussing and designing the system architecture.

UML **class diagrams** are used when developing an object-oriented system model to show the classes in a system and the associations between these classes. An object class can be thought of as a general definition of one kind of system object. An association is a link between classes that indicates that there is some relationship between these classes. When you are developing models during the early stages of the software engineering process, objects represent something in the real world, such as a patient, a prescription, doctor, etc.

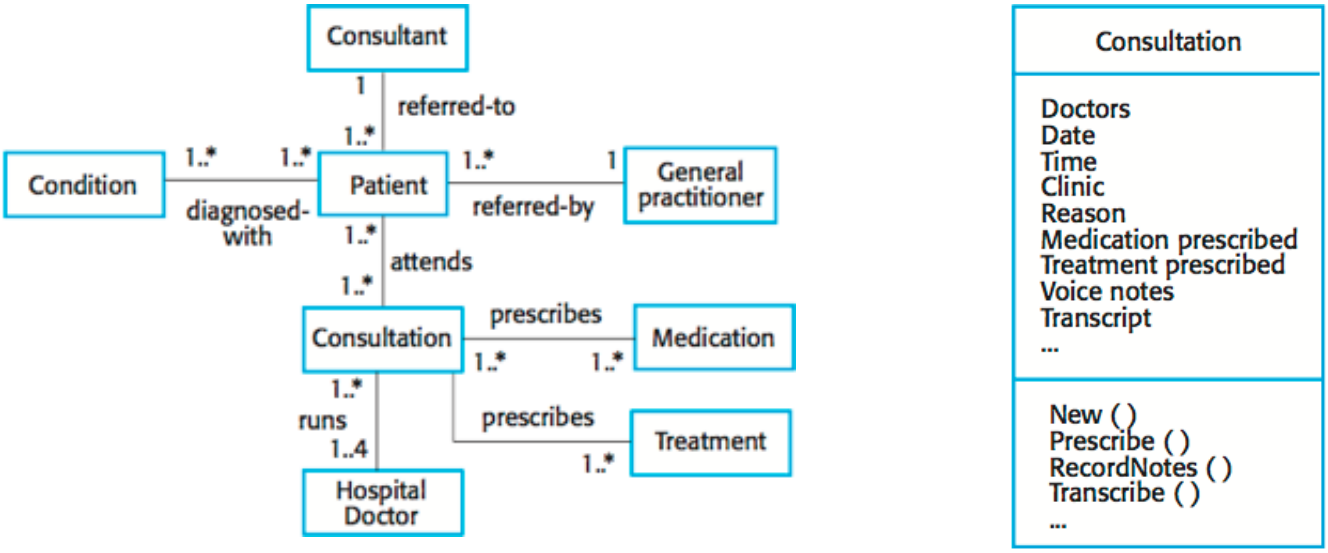

Generalization is an everyday technique that we use to manage complexity. In modeling systems, it is often useful to examine the classes in a system to see if there is scope for generalization. In object-oriented languages, such as Java, generalization is implemented using the class **inheritance** mechanisms built into the language. In a generalization, the attributes and operations associated with higher-level classes are also associated with the lower-level classes. The lower-level classes are subclasses inherit the attributes and operations from their superclasses. These lower-level classes then add more specific attributes and operations.

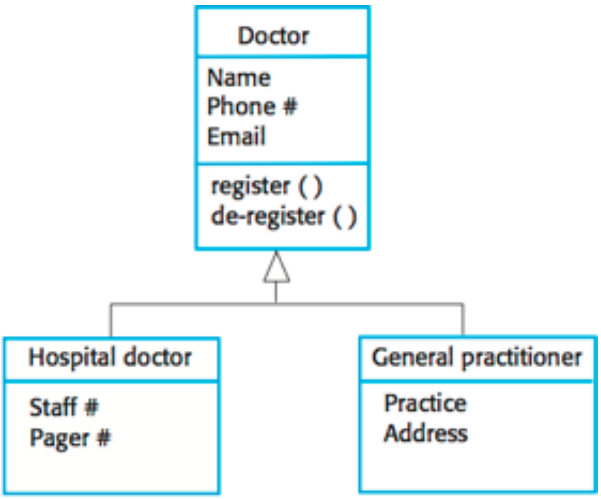

An **aggregation** model shows how classes that are collections are composed of other classes. Aggregation models are similar to the part-of relationship in semantic data models.

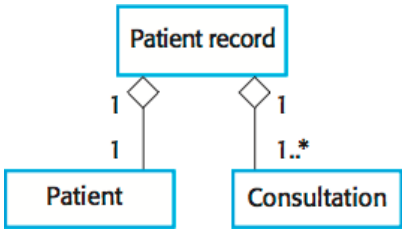

Behavioral models

Behavioral models are models of the dynamic behavior of a system as it is executing. They show what happens or what is supposed to happen when a system responds to a stimulus from its environment. Two types of stimuli:

- Some **data** arrives that has to be processed by the system.
- Some **event** happens that triggers system processing. Events may have associated data, although this is not always the case.

Many business systems are data-processing systems that are primarily driven by data. They are controlled by the data input to the system, with relatively little external event processing. **Data-driven models** show the sequence of actions involved in processing input data and generating an associated output. They are particularly useful during the analysis of requirements as they can be used to show end-to-end processing in a system. Data-driven models can be created using UML **activity diagrams**:

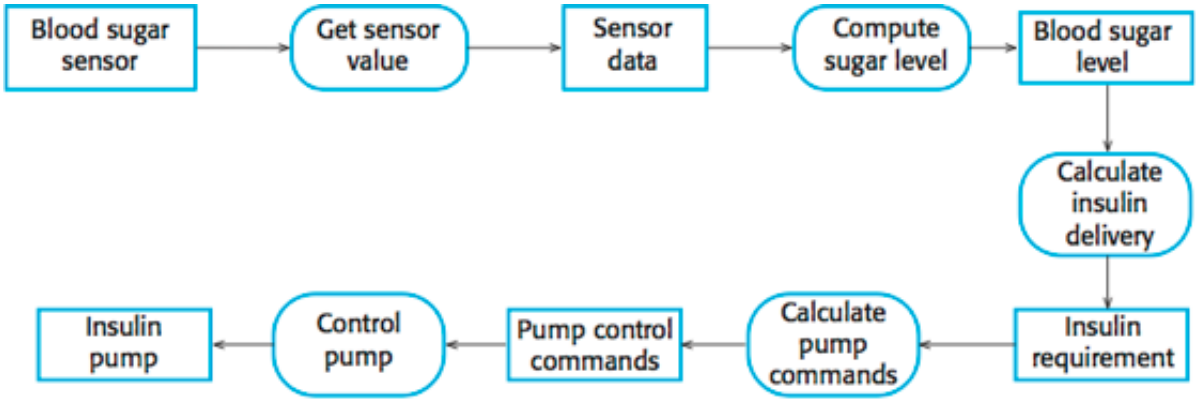

Data-driven models can also be created using UML **sequence diagrams**:

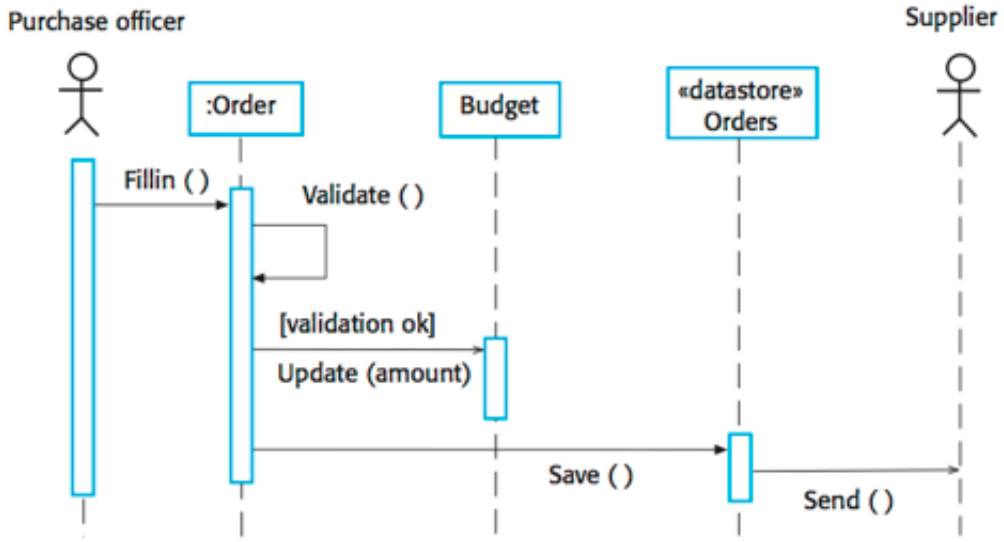

Real-time systems are often event-driven, with minimal data processing. For example, a landline phone switching system responds to events such as 'receiver off hook' by generating a dial tone. **Event-driven models** shows how a system responds to external and internal events. It is based on the assumption that a system has a finite number of states and that events (stimuli) may cause a transition from one state to another. Event-driven models can be created using UML **state diagrams**:

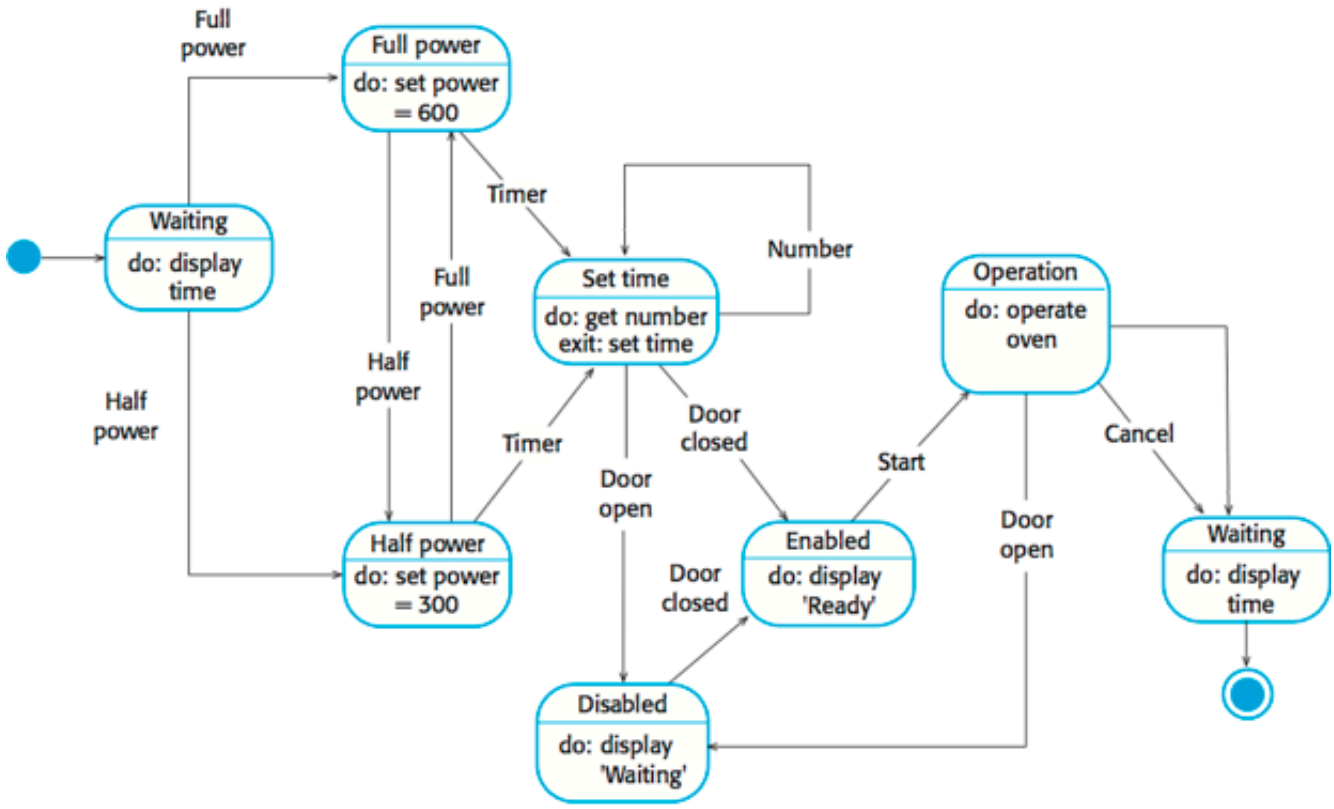
Full power
Full power
do: set power = 600
Waiting
do: display time
Timer
Set time
do: get number
exit: set time
Number
Full power
Half power
Half power
Timer
Door closed
Door open
Operation
do: operate oven
Start
Cancel
Door open
Half power
do: set power = 300
Enabled
do: display 'Ready'
Door closed
Waiting
do: display time
Disabled
do: display 'Waiting'